Part No. 270922

AMBASSADOR DRIVING LIGHT 9"

✓ *1 LUX @ 1 KM*
✓ *70W*
✓ *5700K*



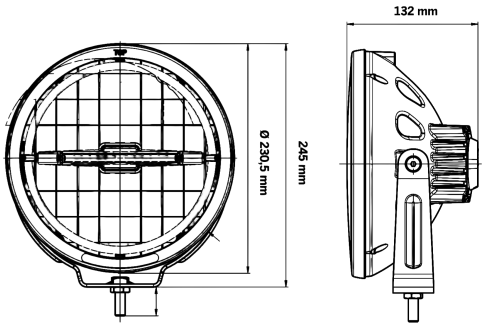

AMBASSADOR DRIVING LIGHT 9"

WHITE / AMBER POS.

The Ambassador driving light 9" is designed for drivers who want the perfect balance between premium design and high-performance lighting.

Read more

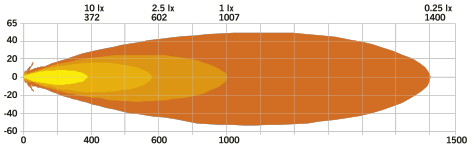

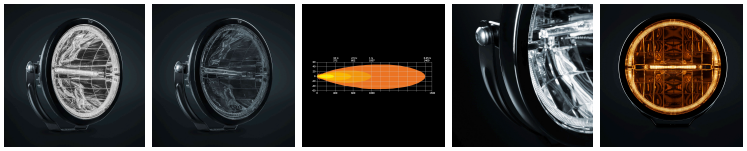

LED

5 YEARS FREEDOM WARRANTY

Voltage (DC)	10-32 V DC
Consumption	70 W
Functions	Amber Pos., White pos., Driving beam
Consumption specific function	Driving 70W, White pos. 1.5W, Amber pos. 1.5W
Actual lumen	4040 lm
1 lux @	1007 m
Color temperature	5700 K
Beam pattern	Extended Beam
Connection	Cable

Cable length	3000 mm
Color lens	Clear
Material housing/chassi	Aluminium
Material lens	Polycarbonate
IP-class	IP68
Operating temperature	-40 - +45 °C
E-approved	No
ECE approval	R10.05